Date	
Fabas item	**3425-26-212**
	RIACE
Customer item	

Spedire a / Send to:
FABAS LUCE S.p.A.
Via Luigi Talamoni, 75
20047 Brugherio (Milano)
Tel 0039 039 890 69 1
0039 039 214 22 06
Fax 0039 039 214 22 08
www.fabasluce.it
info@fabasluce.it

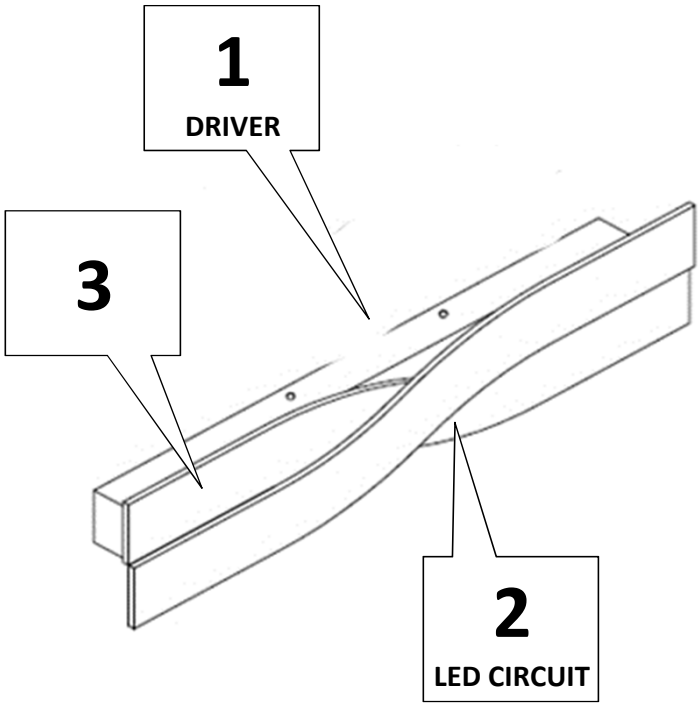

Nr.	CODE	Q.TY'	BAR CODE
1	EAT342526		8019282103653
2	ELE342526		8019282103660
3	CDP102342526		8019282105312
4			
5			
6			
7			
8			
9			
10			
11			
12			
13			
14			
15			
16			
17			
18			
19			
20			

Note

Customer :